GLOVE

Francesco Rota | 2022



GLOVE

Francesco Rota | 2022

"You wear it like a glove, it fits you like a glove." Every time we read these words, we knew what a wonderful feeling characters were experiencing. Whether it was a dress, a house, a love story, that experience was perfect, the body and thoughts moved with absolute naturalness and elegance, and life flowed happily. So when Francesco Rota thought of a name for his new stool, he had no doubts and named it GLOVE. Same pleasant comfort in the wide seat. Same enveloping profile. And above all, same ease in assembling and recycling each element. And given the tradition, we throw down a gauntlet to find a more beautiful solution for every moment of relaxation.



GLOVE

Francesco Rota | 2022

| S471 height adjustable stool

Stool with swivel seat and adjustable height. Frame and base in powder coated steel. Shell in rigid polyurethane upholstered with injected polyurethane fire retardant foam and covered with fabric without any glue. Felt under the base.

EPD certification

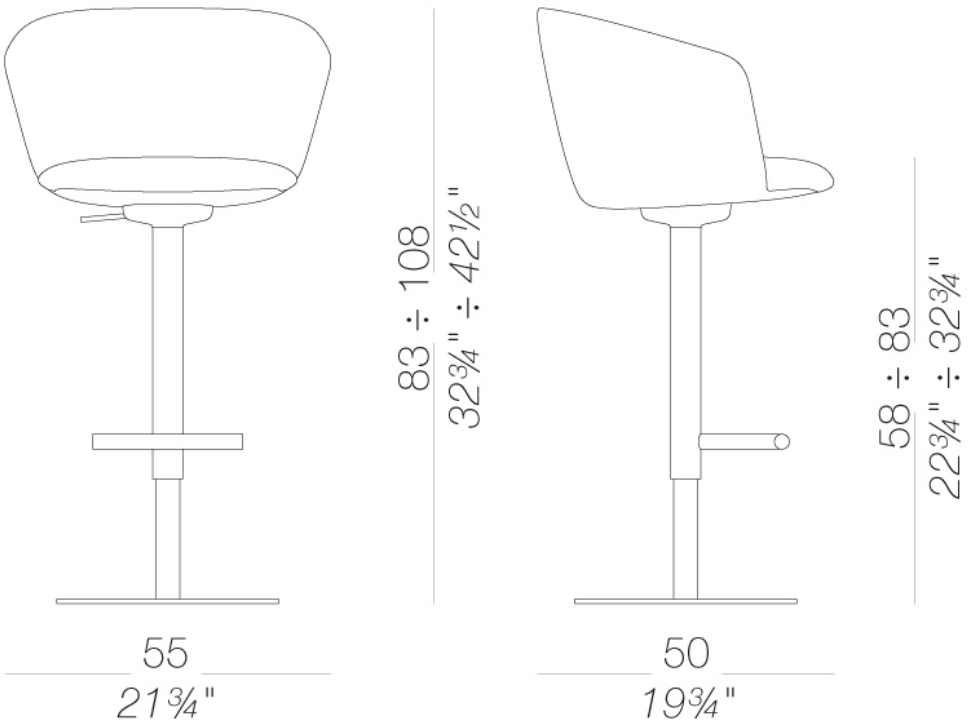

GLOVE

Francesco Rota | 2022

| S472 sled base stool h65

Stool with frame in steel rod powder coated. Shell in rigid polyurethane upholstered with injected polyurethane fire retardant foam and covered with fabric without any glue. Glides in polypropylene with insert in felt or plastic.

EPD certification

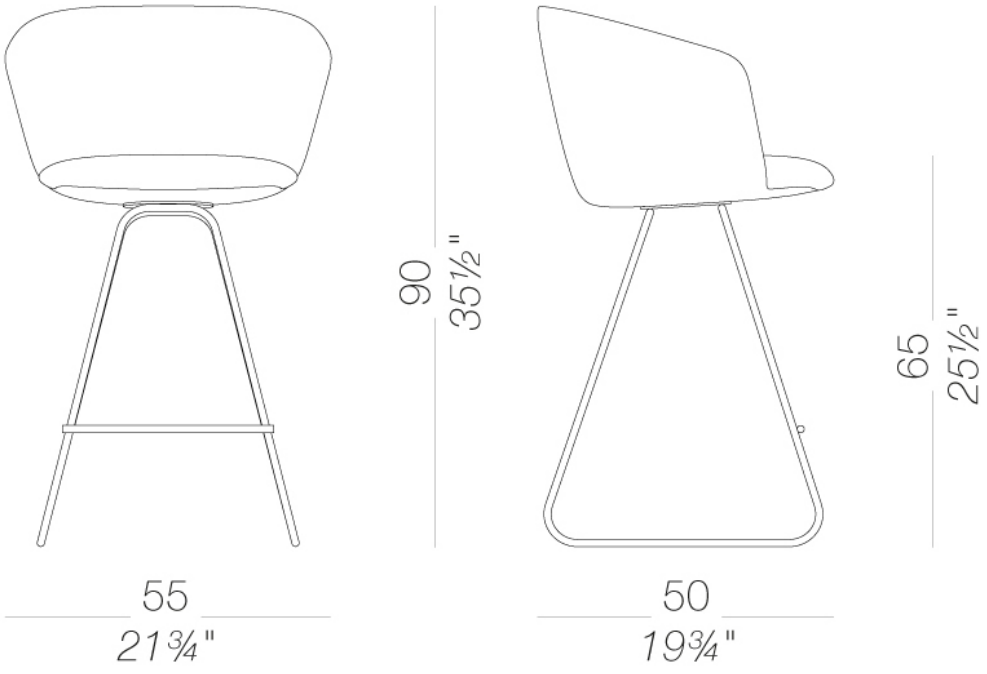

GLOVE

Francesco Rota | 2022

| S473 sled base stool h75

Stool with frame in steel rod powder coated. Shell in rigid polyurethane upholstered with injected polyurethane fire retardant foam and covered with fabric without any glue. Glides in polypropylene with insert in felt or plastic.

EPD certification

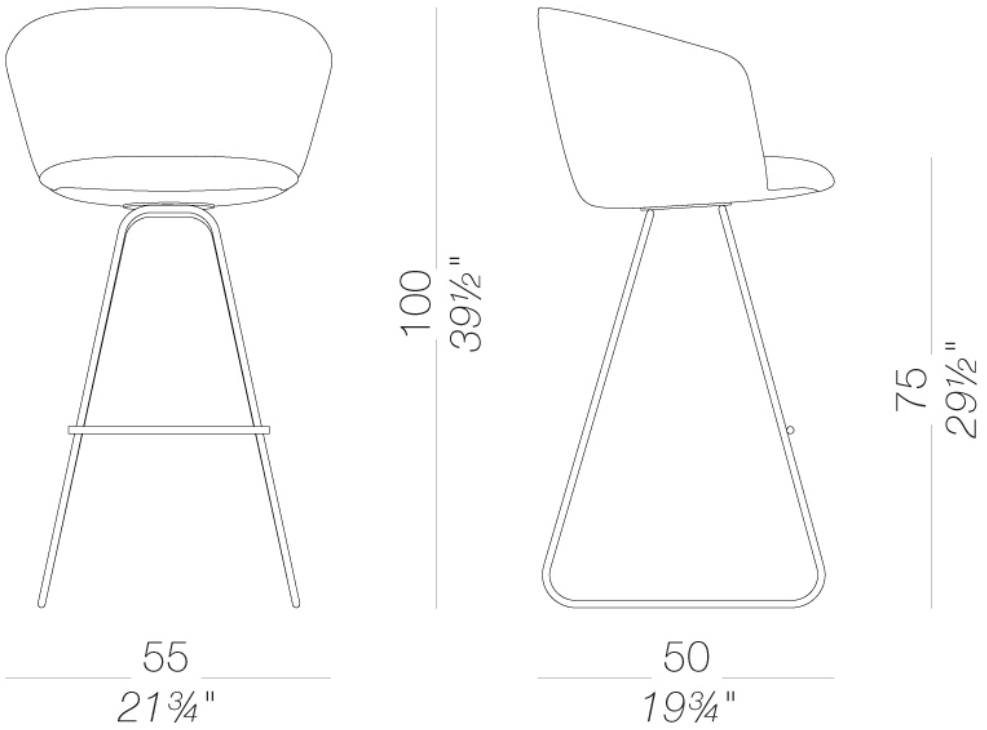

GLOVE

Francesco Rota | 2022

| S474 counter stool with wood legs H65

Stool h 65 cm with frame in curved and painted multilayer wood in two different finishes (bleached oak and open-pore black). Footrest in satin chrome steel wire. Shell in fire-retardant expanded polyurethane foam with rigid polyurethane inserts, upholstered in fabric, leather or eco-leather without the use of glues. Nylon feet with felt or plastic insert.

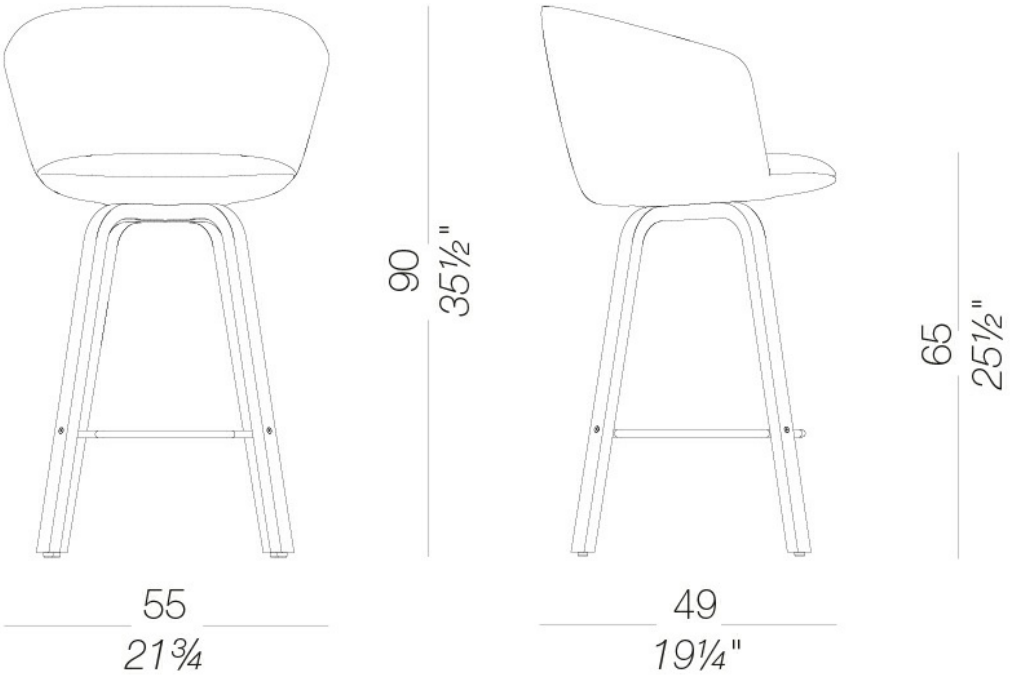

GLOVE

Francesco Rota | 2022

| S475 bar stool with wood legs H75

Stool with legs in moulded plywood blanched oak or black stained and foot rest in steel rod mat chromed. Shell in rigid polyurethane upholstered with injected polyurethane fire retardant foam and covered with fabric, ecoleather or leather without any glue. Feet in nylon with insert in felt.

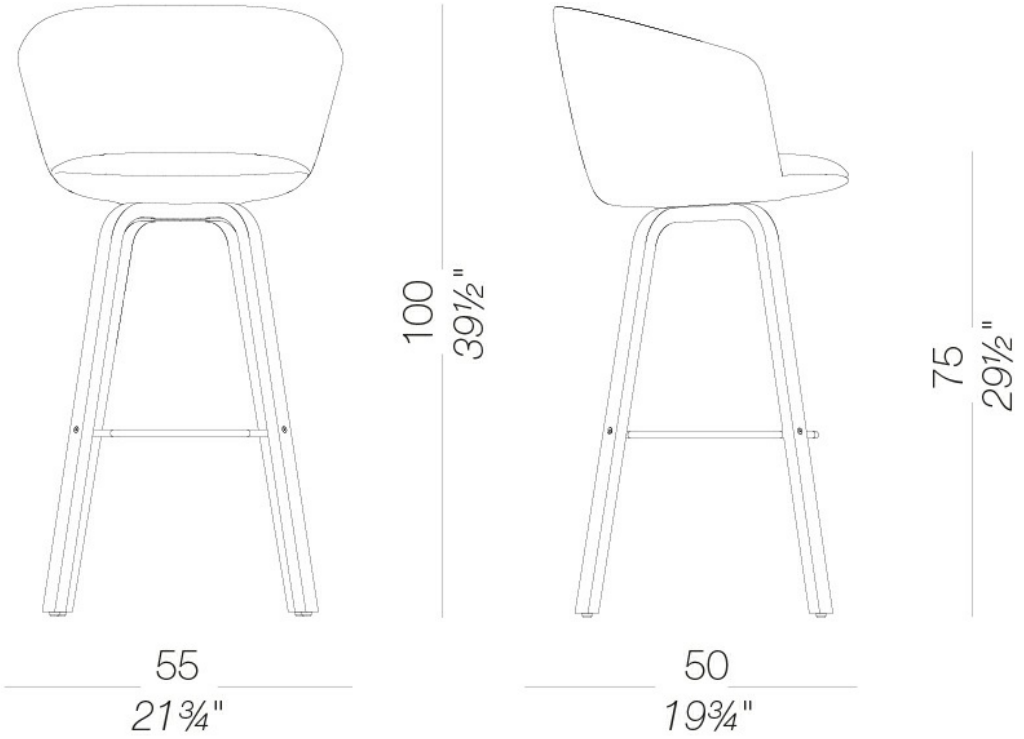

GLOVE

Francesco Rota | 2022

upholstery

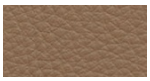
soft-leather
Soft-leather
17 Colors


fabric
Main Line Flax - Grade. B
57 Colors

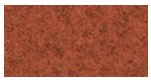
fabric
Blazer - Grade. C
77 Colors


fabric
Re-wool - Grade C
25 Colors

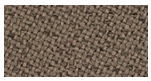
fabric
Chili - Grade. A
47 Colors


fabric
Grain - Grade. B
50 Colors

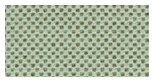
fabric
Umber - Grade. B
36 Colors


ecoleather
Valencia - Grade B
72 Colors


fabric
Nobel - Grade. C
30 Colors


fabric
Steelcut Trio 3 - Grade D
52 Colors


fabric
Naveli - Grade. C
24 Colors


fabric
Steelcut 3 - Grade D
40 Colors

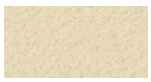
fabric
Divina - Cat. D
60 Colors


fabric
Fiocco - Grade. B
34 Colors


fabric
Atrium - Grade. C
16 Colors


fabric
Tonica 2 - Grade C
39 Colors


fabric
Panama - Grade. A
48 Colors

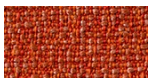
fabric
Sorrento - Grade. B
22 Colors


fabric
Remix 3 - Grade C
72 Colors


fabric
Jet - Grade A
66 Colors


fabric
Hallingdal 65 - Grade C
58 Colors


fabric
Maya - Grade A
43 Colors


fabric
Fiord 2 - Grade C
39 Colors

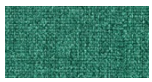
fabric
Medley - Grade A
37 Colors


fabric
Canvas 2 - Grade C
45 Colors


fabric
Capture - Grade B
60 Colors

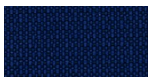
fabric
Iris - Grade B
34 Colors


fabric
Crisp - Grade B
40 Colors

frame


wood
blanched oak
1 Colors


powder coating
black
1 Colors


metal
powder coating
16 Colors

GLOVE

Francesco Rota | 2022

consult the porfolio for the range of colors, fabrics, eco-leather, soft-leather.

use and maintenance instructions
Clean all parts in wood, leather, fabric and metal with a damp cloth or a diluted neutral cleaner. Do not use cleaners with alcohol, bleach, solvent or abrasive products. Any liquid spilt on the product must be wiped up immediately.When lifting or moving the product, hold it on the structure and not under the seat. The product should not be subjected to unbalanced weights, as it is designed for a proper rest on the foothold (on four legs or on the base). Our company relieves from any responsibility in case of damage caused to fragile floors. Avoid any improper use of the product: do not step on the product, on the footrest or on the armrests. Avoid any movements that could compromise the proper functionality of the product or the safety of the users.Wood and leather, being natural materials, could be easily damaged. Small impurities or imperfections are within quality standard range.Do not expose the product to weather conditions or atmospheric agents, nor to heat sources over 40°C. Also products for outdoor use could be afflicted by atmospheric agents. The product could undergo possible exterior changes due to particular exposure to heat, humidity and saltiness. An appropriate and frequent maintenance and cleaning of the product enhances its durability. The product could change colour and shade, if exposed to direct sunlight. Maintenance has to be carried out by experienced staff. Dispose of the package only after assembling the product, in order to avoid the loss of ironmongery and components. Once the product has been dismantled, the product itself or its components must be given to the public garbage disposal system, according to the legislation in force.