FOIL

Francesco Rota | 2022



FOIL

Francesco Rota | 2022

Slender yet accommodating. Relaxing yet extremely stable. The new FOIL armchair, designed by Francesco Rota, is the outcome of a fusion of opposites. The generous padded seat, offering sheer comfort, emerges from the 4-slanted spoke base on castors, integrates with the enveloping backrest and descends into the highly elegant line of the armrests. With its bold yet delicate profile, FOIL holds the secret to a perfect working day. The ultimate in linearity for decision-making. The ultimate in fluidity for ideas. The ultimate in looking to the future for the easy recycling of its separate components. And last but not least, the ultimate pleasure in getting together around a table with colleagues and friends.



FOIL

Francesco Rota | 2022

| S590 armchair with 4 wooden legs

Chair with shell in rigid polyurethane upholstered with injected polyurethane fire retardant foam and covered with fabric without any glue. Legs in solid ash, varnished in several finishes. Glides in polythene.

EPD certification

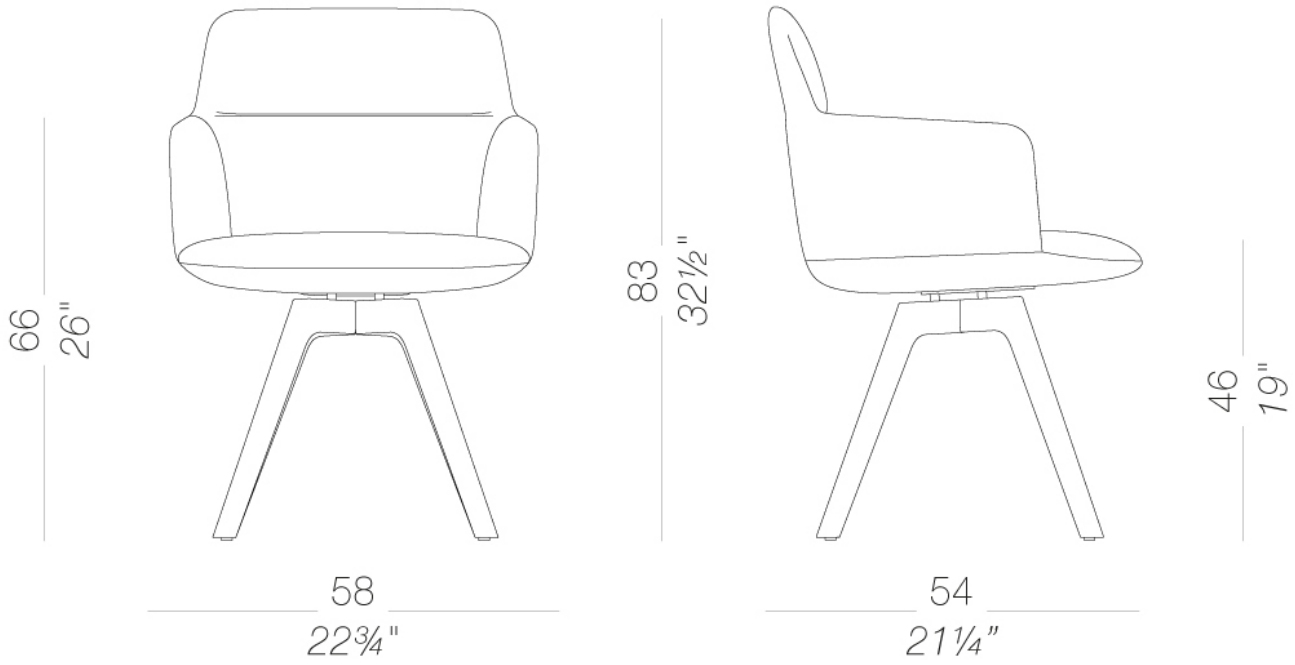

FOIL

Francesco Rota | 2022

| S591 armchair with 4 metal legs

Chair with shell in rigid polyurethane upholstered with injected polyurethane fire retardant foam and covered with fabric without any glue. Legs in steel either powder coated. Glides in polythene.

EPD certification

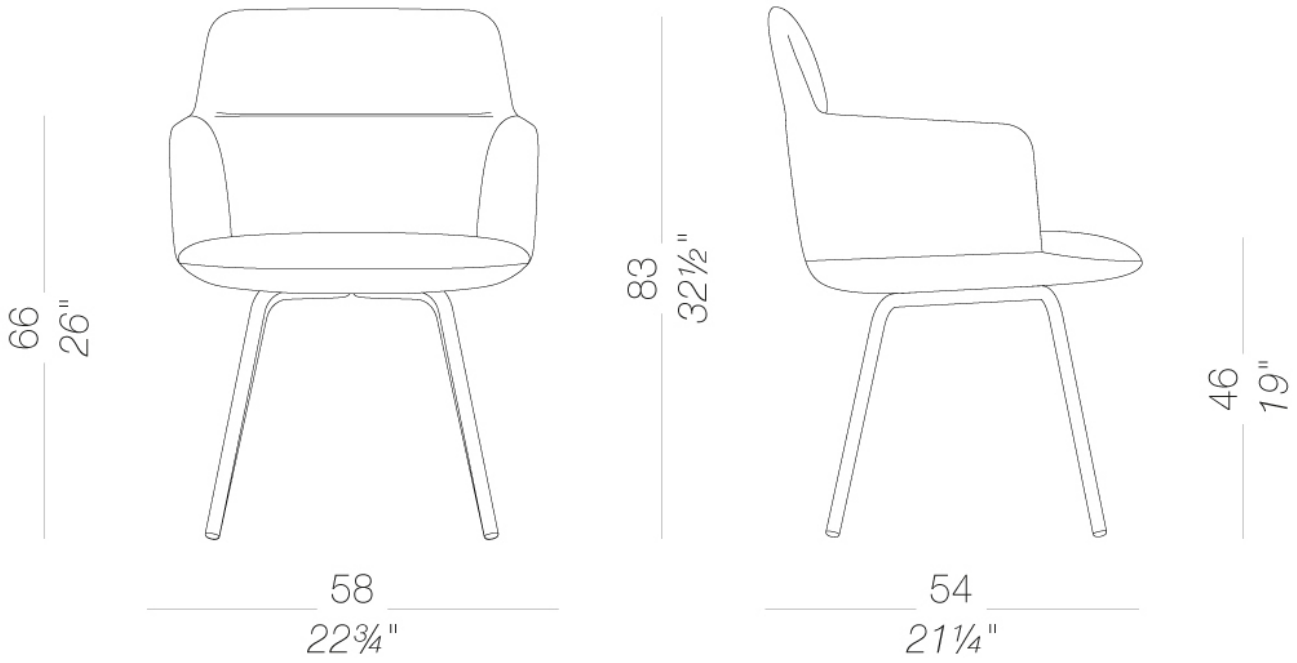

FOIL

Francesco Rota | 2022

| S592 armchair with 4-spoke base

Chair with shell in rigid polyurethane upholstered with injected polyurethane fire retardant foam and covered with fabric without any glue. Pivoting star base in aluminium powder coated. Glides in polythene.

EPD certification

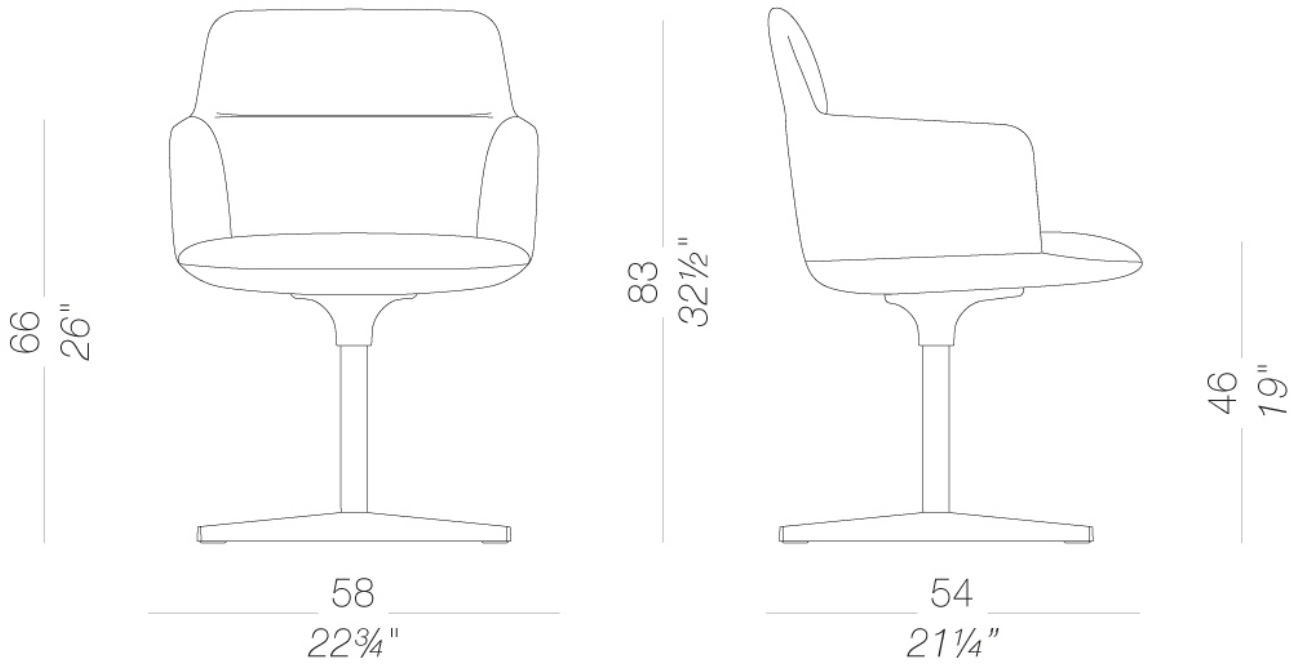

FOIL

Francesco Rota | 2022

| S593 armchair with 4-spoke base on castors

Chair with shell in rigid polyurethane upholstered with injected polyurethane fire retardant foam and covered with fabric without any glue. Trestle swivel base in aluminium powder coated with self-braking castors.

EPD certification

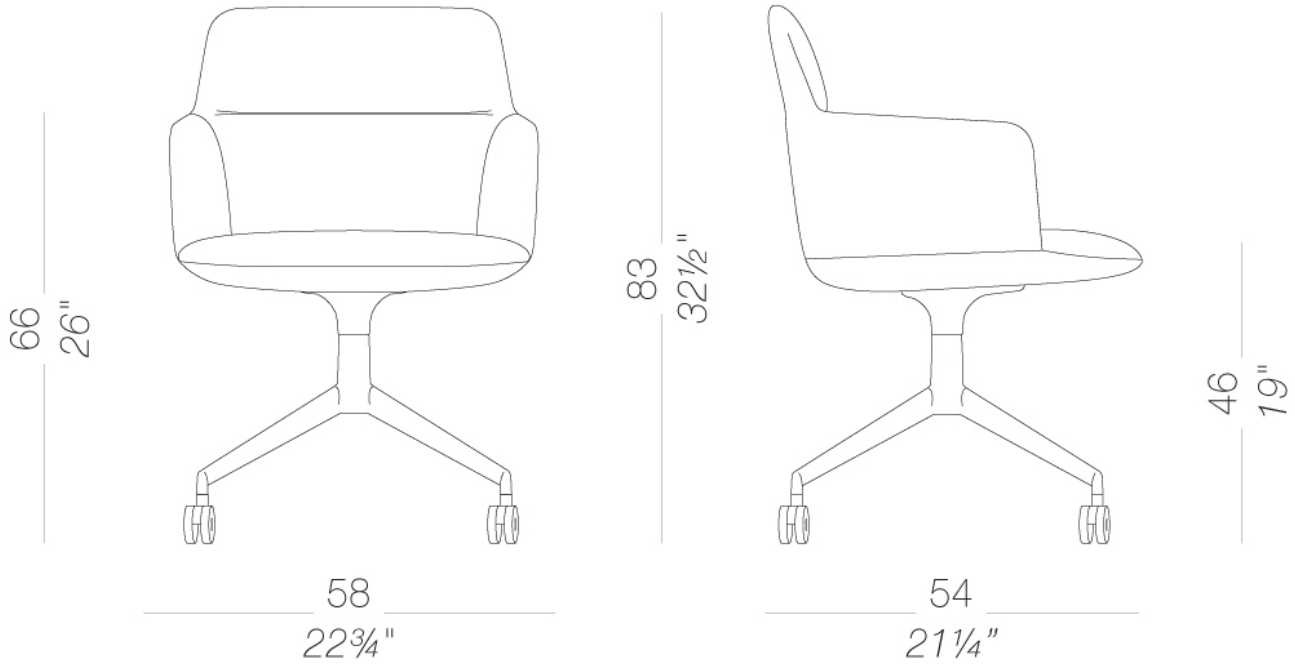

FOIL

Francesco Rota | 2022

| S594 armchair with 5-spoke base on castors

Chair with shell in rigid polyurethane upholstered with injected polyurethane fire retardant foam and covered with fabric without any glue. Height adjustable 5 star swivel base in aluminium powder coated with self-braking castors.

EPD certification

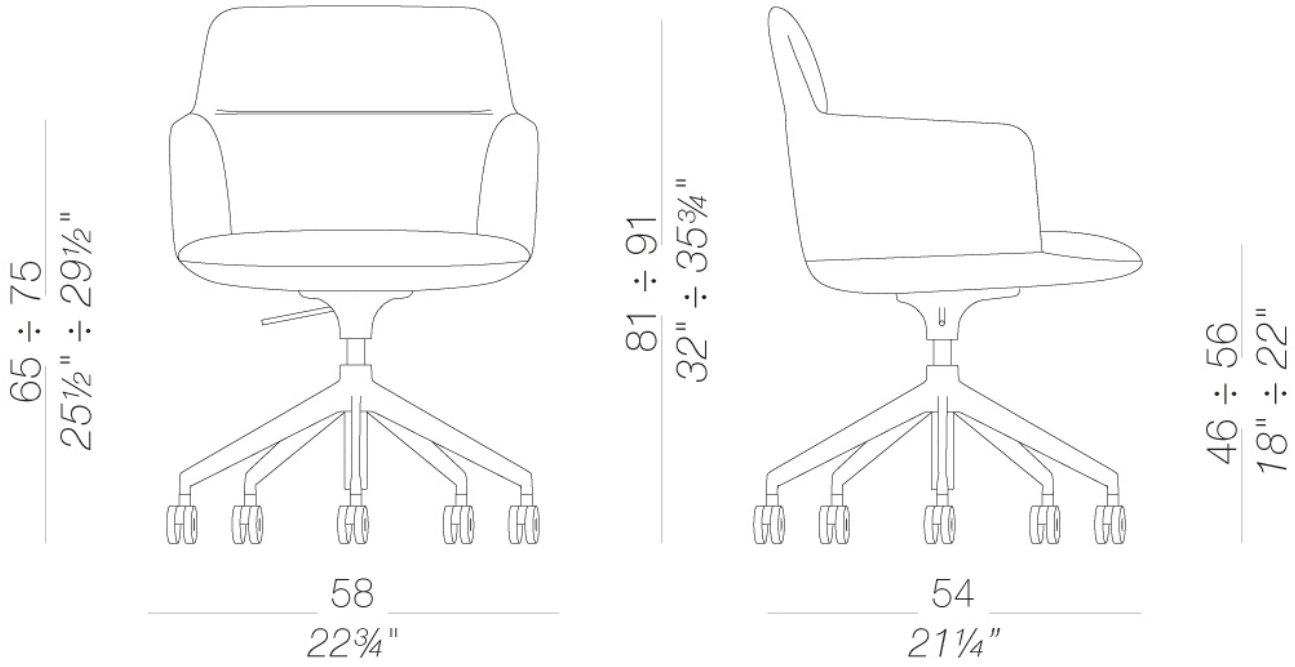

FOIL

Francesco Rota | 2022

| S595 armchair with adjustable, low 5-spoke base

Chair with shell in rigid polyurethane upholstered with injected polyurethane fire retardant foam and covered with fabric without any glue. Height adjustable 5 star swivel base in aluminium powder coated with self-braking castors.

EPD certification

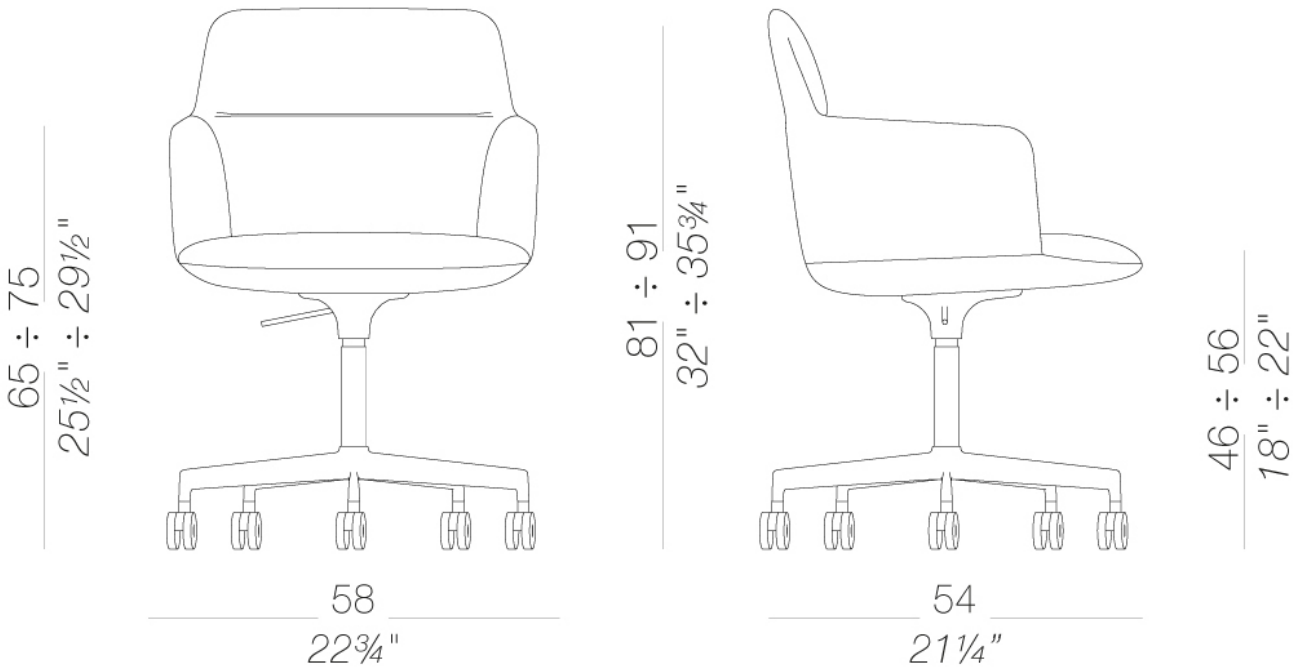

FOIL

Francesco Rota | 2022

upholstery



fabric
Main Line Flax - Grade. B
57 Colors



fabric
Blazer - Grade. C
77 Colors

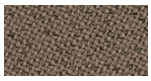

fabric
Chili - Grade. A
47 Colors

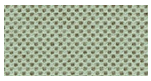

fabric
Umber - Grade. B
36 Colors



fabric
Nobel - Grade. C
30 Colors



fabric
Naveli - Grade. C
24 Colors



fabric
Fiocco - Grade. B
34 Colors



fabric
Atrium - Grade. C
16 Colors



fabric
Panama - Grade. A
48 Colors

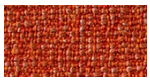

fabric
Sorrento - Grade. B
22 Colors



fabric
Jet - Grade A
66 Colors



fabric
Maya - Grade A
43 Colors

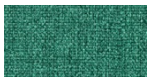

fabric
Medley - Grade A
37 Colors

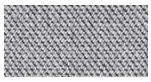

fabric
Capture - Grade B
60 Colors



fabric
Crisp - Grade B
40 Colors



fabric
Iris - Grade B
34 Colors



fabric
Canvas 2 - Grade C
45 Colors



fabric
Fiord 2 - Grade C
39 Colors



fabric
Hallingdal 65 - Grade C
58 Colors



fabric
Remix 3 - Grade C
72 Colors



fabric
Tonica 2 - Grade C
39 Colors



fabric
Divina MD - Grade D
27 Colors



fabric
Divina Melange 3 - Grade D
38 Colors



fabric
Steelcut 3 - Grade D
40 Colors



fabric
Steelcut Trio 3 - Grade D
54 Colors

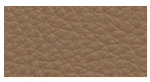

soft-leather
Soft-leather
17 Colors



ecoleather
Valencia - Grade B
72 Colors

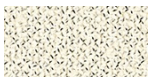

fabric
Grain - Grade. B
50 Colors



fabric
Re-wool - Grade C
25 Colors

frame



powder coating
black
1 Colors



wood
natural ash
1 Colors

FOIL

Francesco Rota | 2022

consult the porfolio for the range of colors, fabrics, eco-leather, soft-leather.

use and maintenance instructions
Clean all parts in wood, leather, fabric and metal with a damp cloth or a diluted neutral cleaner. Do not use cleaners with alcohol, bleach, solvent or abrasive products. Any liquid spilt on the product must be wiped up immediately.When lifting or moving the product, hold it on the structure and not under the seat. The product should not be subjected to unbalanced weights, as it is designed for a proper rest on the foothold (on four legs or on the base). Our company relieves from any responsibility in case of damage caused to fragile floors. Avoid any improper use of the product: do not step on the product, on the footrest or on the armrests. Avoid any movements that could compromise the proper functionality of the product or the safety of the users.Wood and leather, being natural materials, could be easily damaged. Small impurities or imperfections are within quality standard range.Do not expose the product to weather conditions or atmospheric agents, nor to heat sources over 40°C. Also products for outdoor use could be afflicted by atmospheric agents. The product could undergo possible exterior changes due to particular exposure to heat, humidity and saltiness. An appropriate and frequent maintenance and cleaning of the product enhances its durability. The product could change colour and shade, if exposed to direct sunlight. Maintenance has to be carried out by experienced staff. Dispose of the package only after assembling the product, in order to avoid the loss of ironmongery and components. Once the product has been dismantled, the product itself or its components must be given to the public garbage disposal system, according to the legislation in force.